VFUL60
Wire cable tray

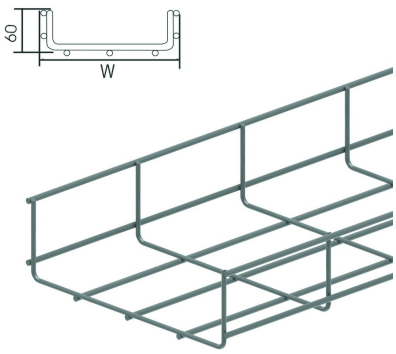

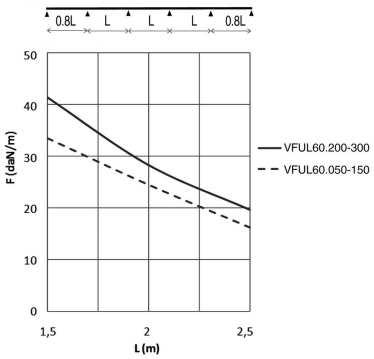

Screen: 50 x 100 mm
Cross-wire: Ø 3.50 mm
Lengthwise wire: Ø 4.50 mm

Standard finish	Pre-galvanised
Optional finish	

HD	Reference	↕ mm	↔ mm	→‖← mm	⇄ mm	kg/m	📦	Stock	Unit
-	**VFUL60.050**	60	50		3000	0,570	30	X	M
-	**VFUL60.100**	60	96		3000	0,830	30	X	M
-	**VFUL60.150**	60	146		3000	0,870	30	X	M
-	**VFUL60.200**	60	197		3000	1,030	30	X	M
-	**VFUL60.300**	60	297		3000	1,330	30	X	M
-	**ZAVFUL60.050**	60	50		3000	0,570	30		M
-	**ZAVFUL60.100**	60	100		3000	0,830	30		M
-	**ZAVFUL60.150**	60	146		3000	0,870	30		M
-	**ZAVFUL60.200**	60	197		3000	1,030	30		M
-	**ZAVFUL60.300**	60	297		3000	1,330	30		M

LOAD DIAGRAM
This diagram illustrates the permissible uniformly distributed loads applied to multiple supports. They comply with IEC 61537 with connection to 1/5 of the span and the end span = 0,8x the span. When the joint is situated in the centre of the span, a reduction of 0,7x the admissible load is to be taken into account.

F = max. admissible load (daN/m)
L = support distance (m)
Max. deflection (m) = L/100

NEW
Our VFUL60 wire cable tray is now available in zinc aluminium (ZA). This coating offers a corrosion protection at least as long as the standard hot dip galvanizing process.
Zinc aluminum (ZA) is identified with a small plate.

Usable inside height: outside height - 7mm
Usable inside width: outside width - 15mm

Fix with:



Support joiner for VFU(L)
VFKS

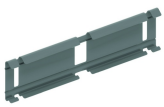

Snap-on joiner for VFU(L)
KPVF