P5501T

Assembly profile

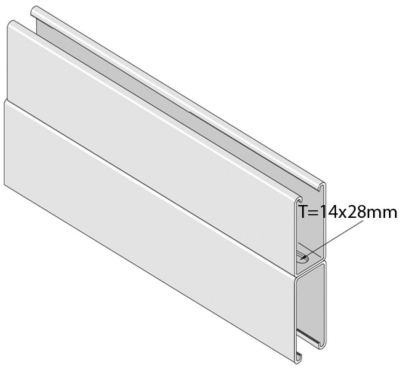

Standard finish		Pre-galvanised							
HD	Reference	↕ mm	↔ mm	→‖← mm	⇄ mm	kg/m	📦	Stock	Unit
-	**P5001TPG**	124	41	2,5	6000	8,497	6		M
-	**P5501TH**	124	41	2,5	6000	7,210	6		M
-	**P5501TPG**	124	41	2,5	6000	6,990	6	X	M

Abbreviation:
- ZP = Zinc Plated
- HG = Hot-Dip Galvanised