P5500T

Assembly profile

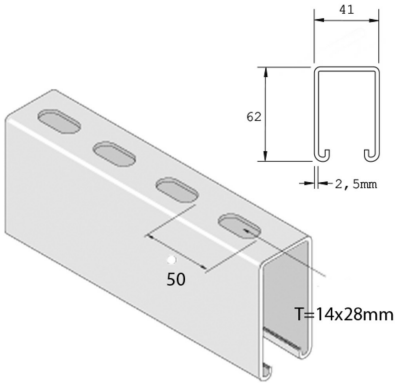

Standard finish		Pre-galvanised							
HD	Reference	↕ mm	↔ mm	→‖← mm	⇄ mm	kg/m	📦	Stock	Unit
-	**P5500T**	62	41	2,5	6000	3,490	6	X	M
-	**P5500TDF**	62	41	2,5	6000	3,490	6		M
-	**P5500TX3000**	62	41	2,5	3000	3,490	3		M
-	**P5500TDFX3**	62	41	2,5	3000	3,490	3		M

Abbreviation:
- ZP = Zinc Plated
- DF = Defender