P5000T

Assembly profile

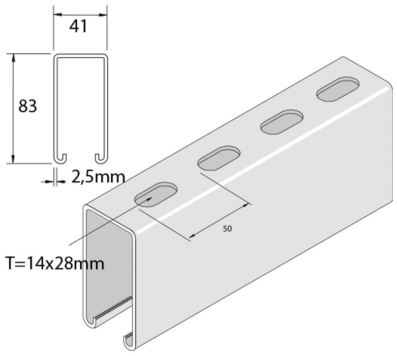

Standard finish		Pre-galvanised							
HD	Reference	↕ mm	↔ mm	→‖← mm	⇄ mm	kg/m	📦	Stock	Unit
-	**P5000T**	83	41	2,5	6000	3,926	6		M
-	**P5000TX3**	83	41	2,5	3000	3,926	60		M
-	**P5000TH**	83	41	2,5	6000	4,050	6		M

Abbreviation:
- PO = Plain Oil
- ZP = Zinc Plated
- HG = Hot-Dip Galvanised