P3301T10

Assembly profile

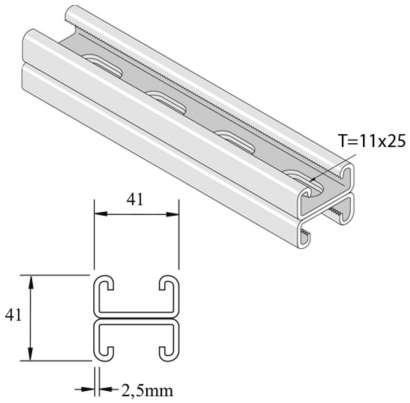

Standard finish		Black Steel							
HD	Reference	↕ mm	↔ mm	→‖← mm	⇄ mm	kg/m	📦	Stock	Unit
-	**P3301T10P**	41	41	2,5	6000	3,590	150		M
-	**P3301T10PG**	41	41	2,5	6000	3,422	6	X	M
-	**P3301T10DF**	41	41	2,5	6000	3,530	6	X	M
-	**P3301T10PGX3**	41	41	2,5	3000	3,422	3	X	M
-	**P3301T10HX3**	41	41	2,5	3000	3,530	75		M

Abbreviation:
- ZP = Zinc Plated
- HG = Hot-Dip Galvanised
- DF = Defender