P3300T10

Assembly profile

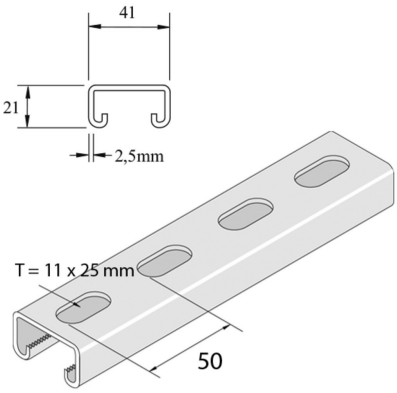

Standard finish		Pre-galvanised							
HD	Reference	↕ mm	↔ mm	→‖← mm	⇄ mm	kg/m	⬡	Stock	Unit
-	**P3300TP10**	21	41	2,5	6000	1,680	6	X	M
-	**P3300T10**	21	41	2,5	6000	1,706	6	X	M
-	**P3301T10H**	41	41	2,50	6000	3,530	6	X	M
-	**P3300T10DF**	21	41	2,5	6000	1,706	6		M
-	**P3300TP10X3**	21	41	2,5	3000	1,679	3		M
-	**P3300T10X3**	21	41	2,5	3000	1,760	3	X	M
-	**P3300T10X2000**	21	41	2,5	2000	1,570	2	X	M
-	**P3300T10DFX3**	21	41	2,5	3000	1,706	3		M
-	**P3300TH10**	21	41	2,50	6000	1,760	3	X	M
-	**P3300TH10X3**	21	41	2,5	3000	1,760	3	X	M

Abbreviation:
- PO = Plain Oil
- ZP = Zinc Plated
- HG = Hot-Dip Galvanised
- DF = Defender