P3300

Assembly profile

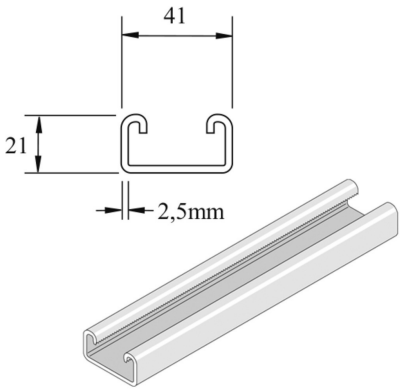

Standard finish		Pre-galvanised							
HD	Reference	↕ mm	↔ mm	→‖← mm	⇄ mm	kg/m	📦	Stock	Unit
-	**P3300P**	21	41	2,5	6000	1,823	6	X	M
-	**P3300PX3**	21	41	2,5	3000	1,823	150		M
-	**P3300**	21	41	2,5	6000	1,852	6	X	M
-	**P3300X3**	21	41	2,5	3000	1,910	3		M
-	**P3300H**	21	41	2,5	6000	1,910	6		M
-	**P3300HX3000**	21	41	2,5	3000	1,910	660		M

Abbreviation:
- PO = Plain Oil
- ZP = Zinc Plated
- HG = Hot-Dip Galvanised