P3100T10

Assembly profile

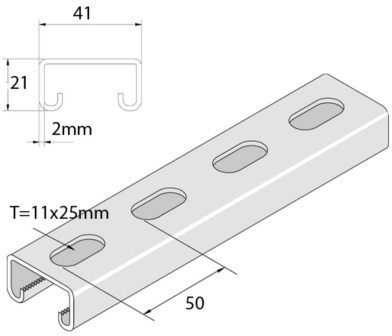

Standard finish		Pre-galvanised							
HD	Reference	↕ mm	↔ mm	→‖← mm	⇄ mm	kg/m	⬡	Stock	Unit
-	**P3100T10**	21	41	2	6000	1,531	6	X	M
-	**P3100TH10**	21	41	2	6000	1,531	6		M
-	**P3100T10X2**	21	41	2	3000	1,531	2	X	M
-	**P3100T10X3**	21	41	2	3000	1,408	3	X	M

Abbreviation:
- PO = Plain Oil
- ZP = Zinc Plated
- HG = Hot-Dip Galvanised