P2000T

Assembly profile

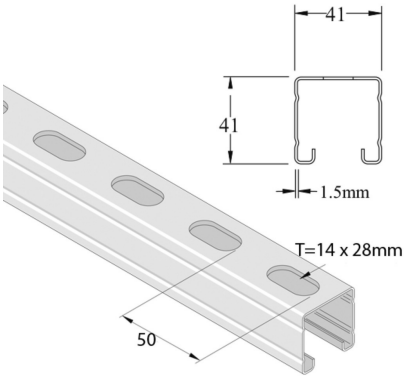

Standard finish		Black Steel							
HD	Reference	↕ mm	↔ mm	→‖← mm	⇄ mm	kg/m	📦	Stock	Unit
-	**P2000TP**	41	41	1,5	6000	1,593	300		M
-	**P2000TPX3**	41	41	1,5	3000	1,593	150		M
-	**P2000T**	41	41	1,5	6000	1,635	6	X	M
-	**P2000TH**	41	41	1,5	6000	1,720	900		M
-	**P2000TX3**	41	41	1,5	3000	1,720	3		M
-	**P2000THX3**	41	41	1,5	3000	1,720	900		M

Abbreviation:
- ZP = Zinc Plated