P1001

Assembly profile

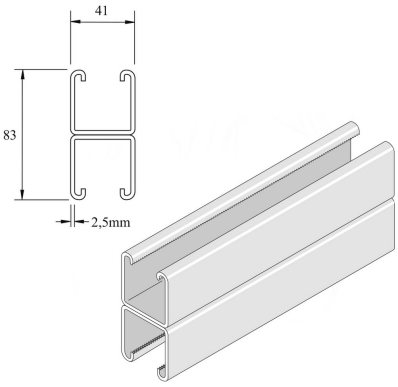

Standard finish		Black Steel							
HD	Reference	↕ mm	↔ mm	→‖← mm	⇄ mm	kg/m		Stock	Unit
-	**P1001P**	82	41	2,5	6000	5,505	150		M
-	**P1001PG**	83	41	2,5	6000	5,594	6	X	M
-	**P1001PGX3000**	82	41	2,5	3000	5,593	75		M
-	**P1001**	83	41	2,5	6000	5,770	6	X	M
-	**P1001X3000**	83	41	2,5	3000	5,770	3		M

Abbreviation:
- ZP = Zinc Plated
- HG = Hot-Dip Galvanised