P1000T

Assembly profile

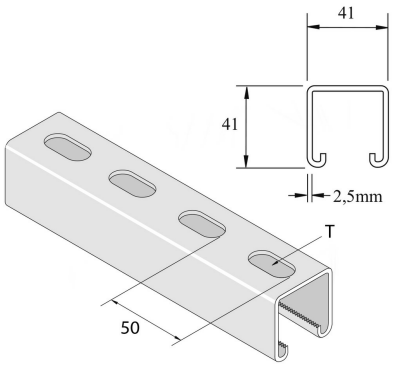

Standard finish		Pre-galvanised							
HD	Reference	↕ mm	↔ mm	→‖← mm	⇄ mm	kg/m	⬡	Stock	Unit
-	**P1000TP**	41	41	2,5	6000	2,605	6	X	M
-	**P1000T**	41	41	2,5	6000	2,647	6	X	M
-	**P1000TH**	41	41	2,5	6000	2,647	6	X	M
-	**P1000TDF**	41	41	2,5	6000	2,647	6	X	M
-	**P1000TPX3**	41	41	2,5	3000	2,605	3		M
-	**P1000TX3**	41	41	2,5	3000	2,730	3	X	M
-	**P1000THX3**	41	41	2,5	3000	2,730	3	X	M
-	**P1000TX3DF**	41	41	2,5	3000	2,647	3		M
-	**P1000TX2000**	41	41	2,5	3000	2,462	2	X	M
-	**P1000THX2000**	41	41	2,50	2000	2,730	2		M

T = 28x14mm

Abbreviation:
- PO = Plain Oil
- ZP = Zinc Plated
- HG = Hot-dip Galvanised
- DF = Defender