P1000

Assembly profile

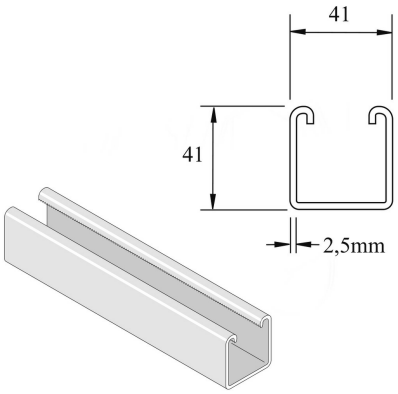

Standard finish		Pre-galvanised							
HD	Reference	↕ mm	↔ mm	→‖← mm	⇄ mm	kg/m	📦	Stock	Unit
-	**P1000P**	41	41	2,5	6000	2,748	6	X	M
-	**P1000**	41	41	2,5	6000	2,792	6	X	M
-	**P1000H**	41	41	2,5	6000	2,647	6	X	M
-	**P1000DF**	41	41	2,5	6000	2,880	6	X	M
-	**P1000PX3**	41	41	2,5	3000	2,748	3		M
-	**P1000X3**	41	41	2,5	3000	2,880	3	X	M
-	**P1000HX3000**	41	41	2,5	3000	2,880	3		M

Abbreviation:
- PO = Plain Oil
- ZP = Zinc Plated
- HG = Hot-dip Galvanised
- DF = Defender