P4045

Z21 Fitting single profile 2D14

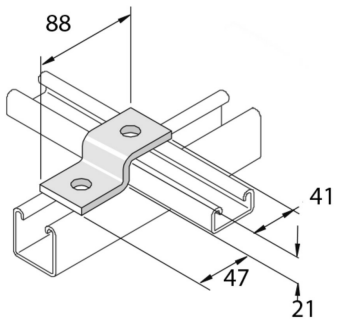

Standard finish		Hot-dip galvanised							
HD	Reference	↕ mm	↔ mm	→‖← mm	⇄ mm	kg/stk		Stock	Unit
-	**P4045**	21			88	0,160	20	X	STK

Abbreviation:
- HG = Hot-Dip Galvanised