P2950

Channel trolley assembly

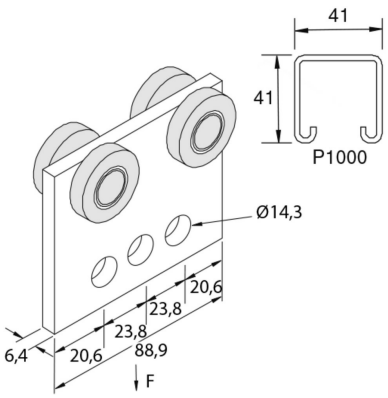

Standard finish									Pre-galvanised
HD	Reference	↕ mm	↔ mm	→‖← mm	⇄ mm	kg/stk	⬡	Stock	Unit
-	**P2950**				89	0,499	10		STK

Abbreviation:
- ZP = Zinc Plated