P2949

Channel trolley assembly

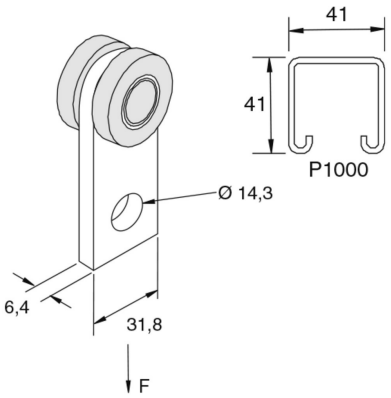

Standard finish								Pre-galvanised	
HD	Reference	↕ mm	↔ mm	→‖← mm	⇄ mm	kg/stk		Stock	Unit
-	**P2949**				32	0,208	20		STK

mild steel

Abbreviation:
- ZP = Zinc Plated