P2750/1

Channel trolley assembly

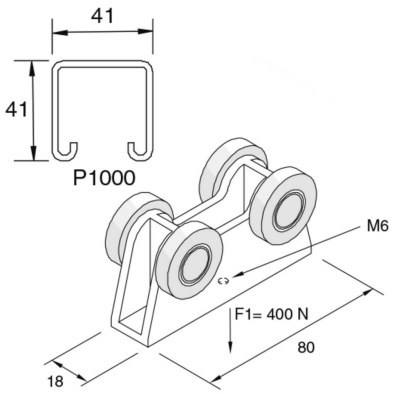

Standard finish						Polyvinyl chloride			
HD	Reference	↕ mm	↔ mm	→‖← mm	⇄ mm	kg/stk		Stock	Unit
-	**P2750/1**				80	0,221	1	X	STK

POM (polyacetal)