P2749

Channel trolley assembly

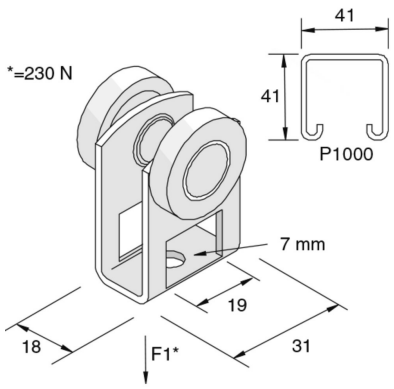

Standard finish						Pre-galvanised			
HD	Reference	↕ mm	↔ mm	→‖← mm	⇄ mm	kg/stk	⬡	Stock	Unit
-	**P2749**				31	0,095	1		STK

Abbreviation:
- ZP = Zinc Plated