P2484

Fitting 90° angle TR 7D14

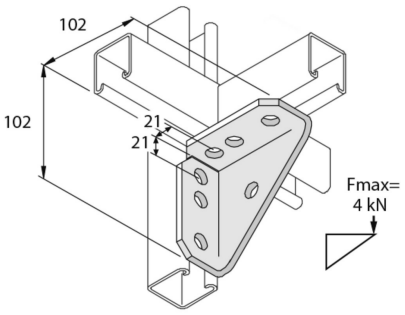

Standard finish						Hot-dip galvanised			
HD	Reference	↕ mm	↔ mm	→‖← mm	⇄ mm	kg/stk		Stock	Unit
-	**P2484**	102	47		102	0,608	10	X	STK
-	**P2484DF**	102	47		102	0,608	10	X	STK