P2322
Fitting flat 3D14

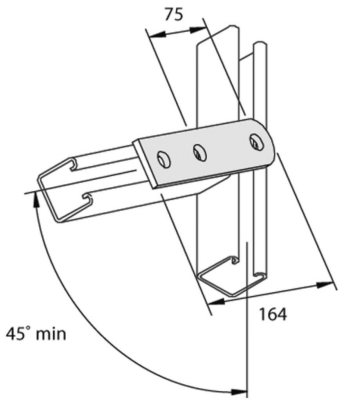

Standard finish						Hot-dip galvanised			
HD	Reference	↕ mm	↔ mm	→‖← mm	⇄ mm	kg/stk	⬡	Stock	Unit
-	**P2322**				164	0,238	20		STK

Abbreviation:
- HG = Hot-Dip Galvanised