P2223

Wing fitting 2L 4D14

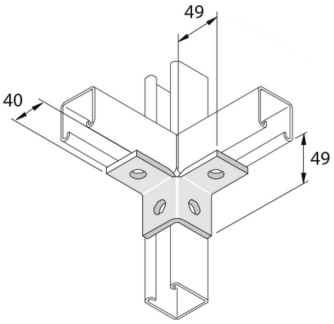

Standard finish						Hot-dip galvanised			
HD	Reference	↕ mm	↔ mm	→‖← mm	⇄ mm	kg/stk	⬡	Stock	Unit
-	**P2223**	49	82		82	0,274	10	X	STK
-	**P2223DF**	49			89	0,274	10	X	STK

Abbreviation:
- HG = Hot-Dip Galvanised