P2108

Fitting angle 120° 2D14

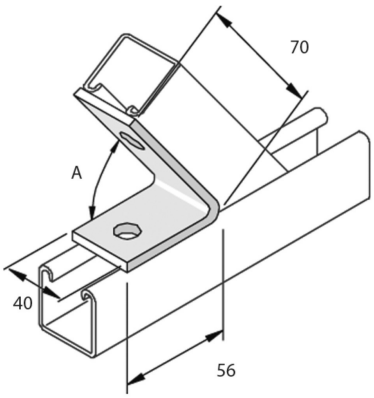

Standard finish: Hot-dip galvanised

HD	Reference	↕ mm	↔ mm	→‖← mm	⇄ mm	kg/stk	📦	Stock	Unit
-	**P2108**					0,188	20		STK

A = 60°

Abbreviation:
- HG = Hot-Dip Galvanised