P2101

Fitting angle 30° 2D14

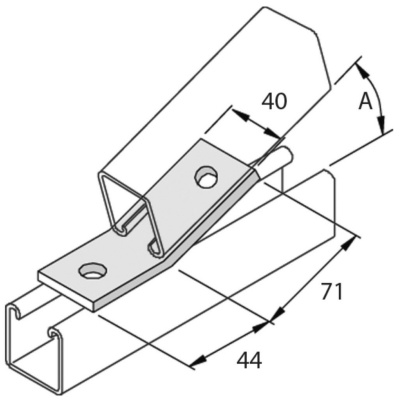

Standard finish						Hot-dip galvanised			
HD	Reference	↕ mm	↔ mm	→‖← mm	⇄ mm	kg/stk	⬡	Stock	Unit
-	**P2101**					0,188	10		STK

A = 30°

Abbreviation:
- HG = Hot-Dip Galvanised