P2097

Fitting angle 60° 2D14

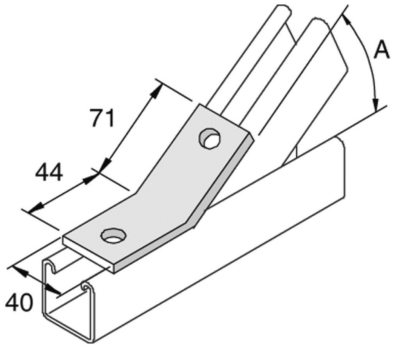

Standard finish						Hot-dip galvanised			
HD	Reference	↕ mm	↔ mm	→‖← mm	⇄ mm	kg/stk	⬡	Stock	Unit
-	**P2097**					0,188	10	X	STK

A = 60°

Abbreviation:
- HG = Hot-Dip Galvanised