P2095

Fitting angle 75° 2D14

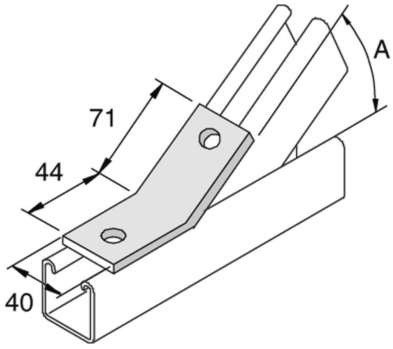

Standard finish						Hot-dip galvanised			
HD	Reference	↕ mm	↔ mm	→‖← mm	⇄ mm	kg/stk		Stock	Unit
-	**P2095**					0,188	10		STK

A = 75°

Abbreviation:
- HG = Hot-Dip Galvanised