P2073A

Base plate 152 double profile 12D14

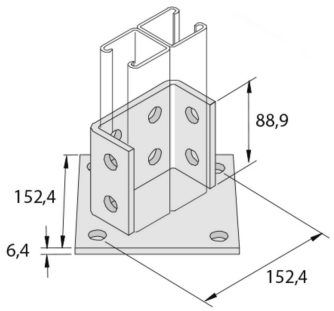

Standard finish						Hot-dip galvanised			
HD	Reference	↕ mm	↔ mm	→‖← mm	⇄ mm	kg/stk		Stock	Unit
-	**P2073A**	96	152		152	1,798	10	X	STK
-	**P2073ADF**	95			152	1,798	10	X	STK

Abbreviation:
- HG = Hot-Dip Galvanised