P1983
Z50 Clamp

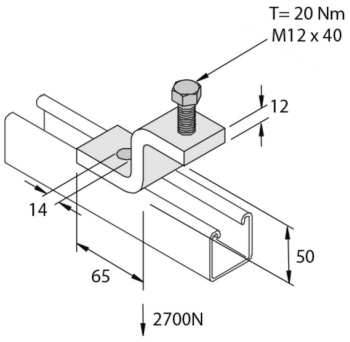

Standard finish		Hot-dip galvanised							
HD	Reference	↕ mm	↔ mm	→‖← mm	⇄ mm	kg/stk		Stock	Unit
-	**P1983**	62	41	12,0	105	0,385	10		STK
-	**P1983DF**	50	40			0,390	10		STK

Abbreviation:
- HG = Hot-Dip Galvanised