P1941
Fitting flat 5D14

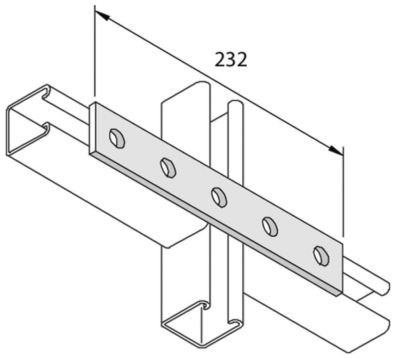

Standard finish						Hot-dip galvanised			
HD	Reference	↕ mm	↔ mm	→‖← mm	⇄ mm	kg/stk		Stock	Unit
-	**P1941**		40		232	0,364	20	X	STK

Abbreviation:
- HG = Hot-Dip Galvanised