P1834

Assembly accessory

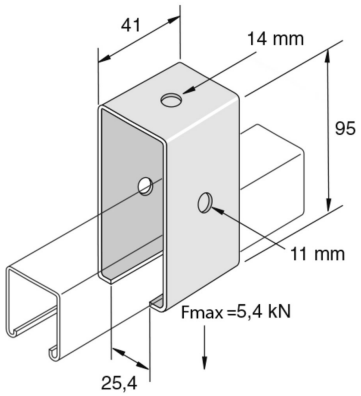

Standard finish									Hot-dip galvanised
HD	Reference	↕ mm	↔ mm	→‖← mm	⇄ mm	kg/stk		Stock	Unit
-	**P1834**	95	41		41	0,490	10	X	STK

Abbreviation:
- HG = Hot-Dip Galvanised