P1580
Fitting flat X 4D14

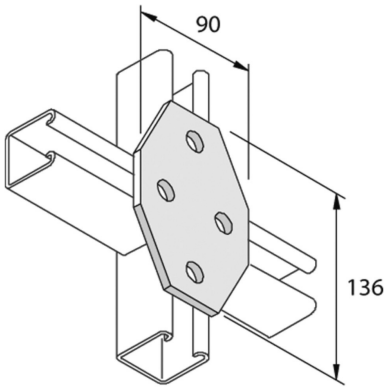

Standard finish						Hot-dip galvanised			
HD	Reference	↕ mm	↔ mm	→‖← mm	⇄ mm	kg/stk	⬡	Stock	Unit
-	**P1580**		90		136	0,480	10	X	STK
-	**P1580DF**		90		136	0,480	10		STK

Abbreviation:
- HG = Hot-Dip Galvanised