P1546

Fitting angle 45° 2D14

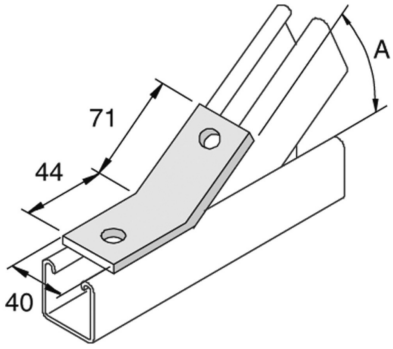

Standard finish						Hot-dip galvanised			
HD	Reference	↕ mm	↔ mm	→‖← mm	⇄ mm	kg/stk	⬡	Stock	Unit
-	**P1546**		40			0,188	10	X	STK

A = 45°

Abbreviation:
- HG = Hot-Dip Galvanised