P1359

Fitting 90° angle LTR 4D14

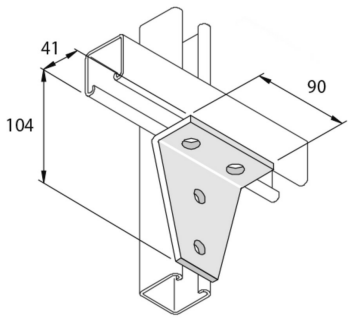

Standard finish		Hot-dip galvanised							
HD	Reference	↕ mm	↔ mm	→‖← mm	⇄ mm	kg/stk		Stock	Unit
-	**P1359**	90	41		104	0,480	10	X	STK
-	**P1359DF**	104	41		90	0,480	10	X	STK

Abbreviation:
- HG = Hot-Dip Galvanised