P1326

Fitting 90° angle L 2D14

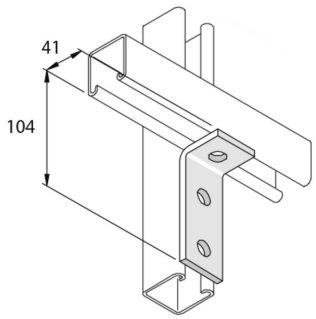

Standard finish		Hot-dip galvanised							
HD	Reference	↕ mm	↔ mm	→‖← mm	⇄ mm	kg/stk		Stock	Unit
-	**P1326**	41	40		104	0,213	20	X	STK

Abbreviation:
- HG = Hot-Dip Galvanised