P1325

Fitting 90° angle L 4D14

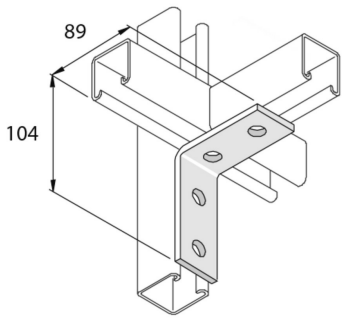

Standard finish		Hot-dip galvanised							
HD	Reference	↕ mm	↔ mm	→‖← mm	⇄ mm	kg/stk		Stock	Unit
-	**P1325**	89	40		104	0,288	25	X	STK
-	**P1325DF**	89	40		104	0,375	25	X	STK

Abbreviation:
- HG = Hot-Dip Galvanised