P1272

I-beam clamp C25

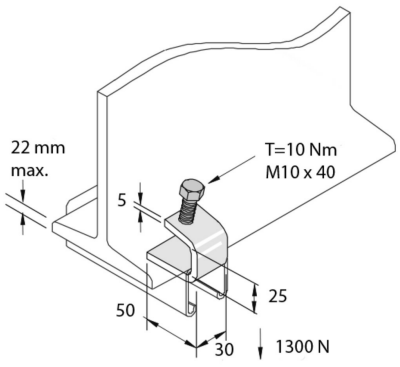

Standard finish		Hot-dip galvanised							
HD	Reference	↕ mm	↔ mm	→‖← mm	⇄ mm	kg/stk		Stock	Unit
-	**P1272**	25	30		50	0,119	20	X	STK

Abbreviation:
- HG = Hot-Dip Galvanised