P1271
I-beam clamp C63

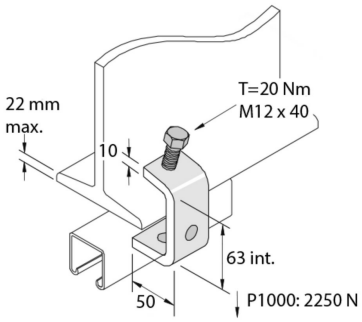

Standard finish		Hot-dip galvanised							
HD	Reference	↕ mm	↔ mm	→‖← mm	⇄ mm	kg/stk		Stock	Unit
-	**P1271**	63	40		50	0,428	10	X	STK

Abbreviation:
- HG = Hot-Dip Galvanised