P1186

Fitting angle 135° 2D14

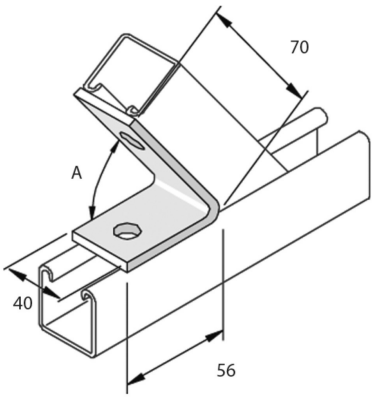

Standard finish: Hot-dip galvanised

HD	Reference	↕ mm	↔ mm	→‖← mm	⇄ mm	kg/stk	📦	Stock	Unit
-	**P1186**		40		56	0,188	20	X	STK

A = 45°

Abbreviation:
- HG = Hot-Dip Galvanised