P1067
Fitting flat 4D14

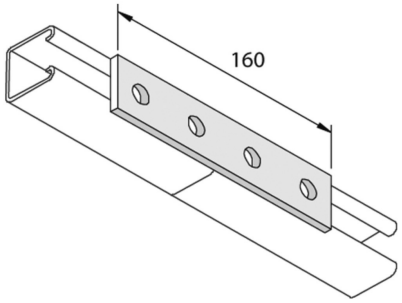

Standard finish									
						Hot-dip galvanised			
HD	Reference	↕ mm	↔ mm	→‖← mm	⇄ mm	kg/stk	⬡	Stock	Unit
-	**P1067**		41		160	0,251	20	X	STK
-	**P1067DF**		40		160	0,251	20	X	STK

Abbreviation:
- HG = Hot-Dip Galvanised