P1044

C96 Fitting 4D14

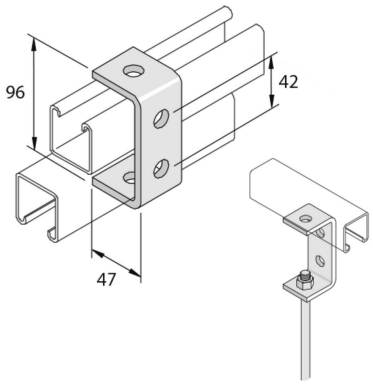

Standard finish		Hot-dip galvanised							
HD	Reference	↕ mm	↔ mm	→‖← mm	⇄ mm	kg/stk		Stock	Unit
-	**P1044**	96	47		41	0,270	10		STK
-	**P1044DF**	96	40		47	0,320	10	X	STK

Abbreviation:
- HG = Hot-Dip Galvanised