P1043

OM41 Fitting double profile 6D14

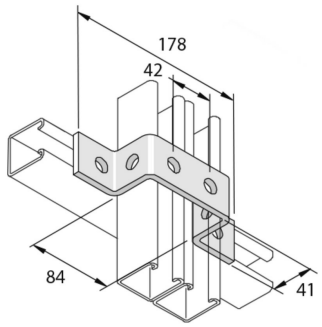

Standard finish		Hot-dip galvanised							
HD	Reference	↕ mm	↔ mm	→‖← mm	⇄ mm	kg/stk		Stock	Unit
-	**P1043**	41	40		178	0,389	10		STK

Abbreviation:
- HG = Hot-Dip Galvanised