P1038

Fitting 90° angle 90x51 3D14

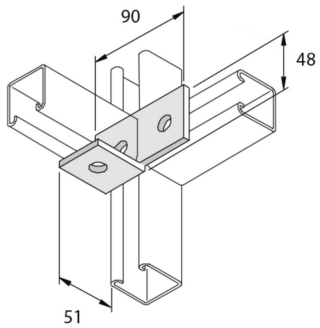

Standard finish		Hot-dip galvanised							
HD	Reference	↕ mm	↔ mm	→‖← mm	⇄ mm	kg/stk		Stock	Unit
-	**P1038**	51	48		90	0,317	10		STK

Abbreviation:
- HG = Hot-Dip Galvanised