P1036

Fitting flat 90x90 3D14

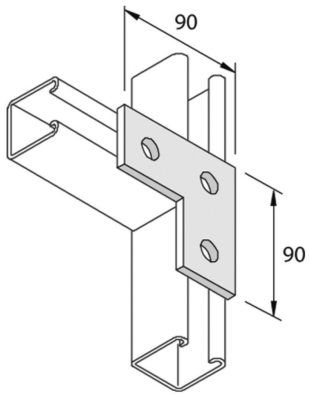

Standard finish								Hot-dip galvanised	
HD	Reference	↕ mm	↔ mm	→‖← mm	⇄ mm	kg/stk	⬡	Stock	Unit
-	**P1036**		90		90	0,233	20	X	STK
-	**P1036DF**		90		90	0,206	20	X	STK

Abbreviation:
- HG = Hot-Dip Galvanised