P1031
Fitting flat T 4D14

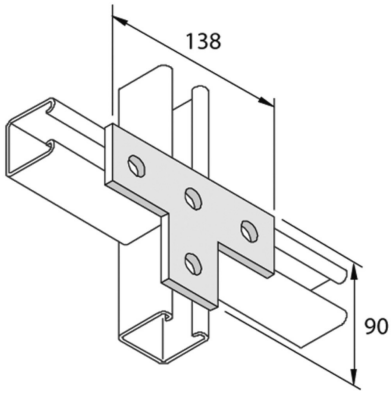

Standard finish		Hot-dip galvanised							
HD	Reference	↕ mm	↔ mm	→‖← mm	⇄ mm	kg/stk		Stock	Unit
-	**P1031**		90		138	0,374	10	X	STK
-	**P1031DF**	90			138	0,374	10	X	STK

Abbreviation:
- HG = Hot-Dip Galvanised