P1020

Fitting Square 40x40 D13

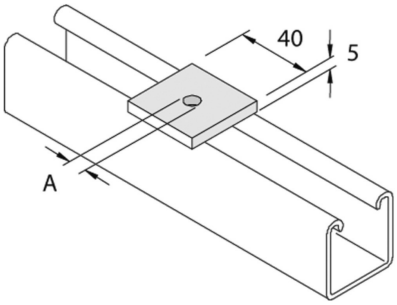

Standard finish								Hot-dip galvanised	
HD	Reference	↕ mm	↔ mm	→‖← mm	⇄ mm	kg/stk		Stock	Unit
-	**P1020**		40	5,0	40	0,062	100	X	STK
-	**P1020DF**		40	5	40	0,062	100	X	STK

A=13, bolt M10/M12

Abbreviation:
- HG = Hot-Dip Galvanised