AF
Channel socket

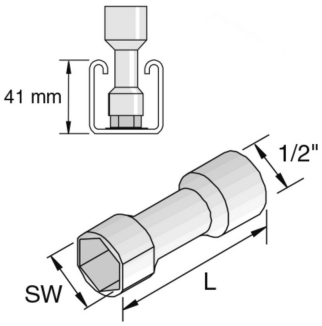

Standard finish								Pre-galvanised	
HD	Reference	↕ mm	↔ mm	→‖← mm	⇄ mm	kg/stk	⬡	Stock	Unit
-	**17AF**				41	0,125	1	X	STK
-	**17AF/P3300**				21	0,125	1		STK
-	**17AF/LONG**				107	0,125	1		STK
-	**19AF**				41	0,135	1	X	STK
-	**19AF/LONG**				170	0,135	1		STK

17AF: M10
19AF: M12