VN

Special Ceiling Mounting System

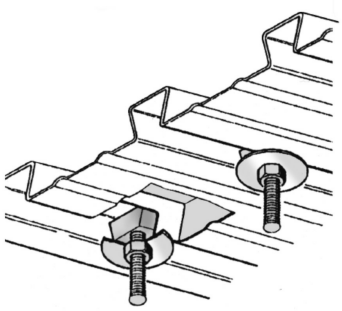

HD	Reference	↕ mm	↔ mm	→‖← mm	⇄ mm	kg/stk	⬡	Stock	Unit
-	**VN10**	13	13		25	0,018	100		STK