SS2A - SS2N

SS2 Pipe Clamp

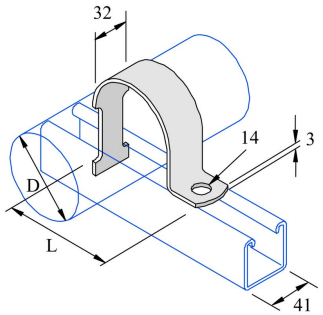

Standard finish		Hot-dip galvanised							
HD	Reference	↕ mm	↔ mm	→‖← mm	⇄ mm	kg/stk		Stock	Unit
-	**SS2/AH**	66	32		66	0,062	20		STK
-	**SS2/BH**	73	32		73	0,071	20		STK
-	**SS2/CH**	81	32		81	0,086	20		STK
-	**SS2/DH**	90	32		90	0,104	20		STK
-	**SS2/EH**	96	32		96	0,115	10		STK
-	**SS2/FH**	96	32		96	0,140	10		STK
-	**SS2/GH**	113	32		113	0,172	10		STK
-	**SS2/HH**	125	32		125	0,199	10		STK
-	**SS2/JH**	137	32		137	0,224	10		STK
-	**SS2/KH**	150	32		150	0,251	10		STK
-	**SS2/MH**	204	32		204	0,357	10		STK
-	**SS2/NH**	255	32		255	0,461	10		STK

Abbreviation:
- HG = Hot-Dip Galvanised