# P171
## Long U-Bolt 250mm M12

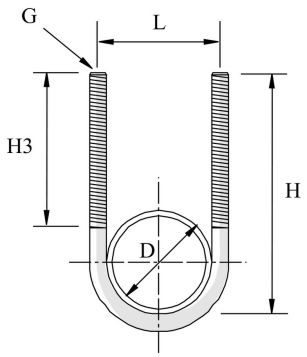


Standard finish: Electro zinc-plated

| HD | Reference | ↕ mm | ↔ mm | →‖← mm | ⇄ mm | kg/stk | 📦 | Stock | Unit |
|---|---|---|---|---|---|---|---|---|---|
| - | **171003402** | 41 | | M6 | 41 | 0,050 | 100 | | STK |
| - | **171004212** | 52 | | M8 | 52 | 0,100 | 100 | | STK |
| - | **171004812** | 57 | | M8 | 57 | 0,110 | 100 | | STK |
| - | **171004822** | 59 | | M10 | 59 | 0,130 | 100 | | STK |
| - | **171006012** | 71 | | M8 | 71 | 0,130 | 100 | | STK |
| - | **171006022** | 73 | | M10 | 73 | 0,150 | 100 | | STK |
| - | **171016842** | 240 | | | 186 | 0,700 | 25 | | STK |
| - | **171007622** | 89 | | M10 | 89 | 0,160 | 100 | | STK |
| - | **171008922** | 100 | | M10 | 100 | 0,190 | 50 | | STK |
| - | **171011422** | 124 | | M10 | 124 | 0,210 | 50 | | STK |
| - | **171013932** | 213 | | | 156 | 0,360 | 25 | | STK |
| - | **171016832** | 182 | | M12 | 182 | 0,400 | 25 | | STK |
| - | **171027332** | 290 | | M12 | 290 | 0,700 | 1 | | STK |

Abbreviation:
- ZP = Zinc Plated