SN

Sliding nut for supporting profile

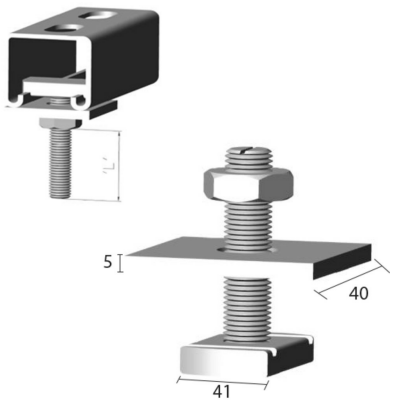

Standard finish						Pre-galvanised			
HD	Reference	↕ mm	↔ mm	→‖← mm	⇄ mm	kg/stk	📦	Stock	Unit
-	**M6X30SN**		35			0,068	100		STK
-	**M8X30SN**		35			0,081	100		STK
-	**M8X40SN**		35			0,084	100		STK
-	**M8X50SN**		35			0,087	100		STK
-	**M8X60SN**		35			0,090	100		STK
-	**M8X75SN**		35			0,095	100		STK
-	**M8X100SN**		35			0,103	100		STK
-	**M10X30SN**		35			0,097	100		STK
-	**M10X40SN**		35			0,102	100		STK
-	**M10X50SN**		35			0,107	100		STK
-	**M10X60SN**		35			0,112	100		STK
-	**M10X75SN**		35			0,120	100		STK
-	**M10X100SN**		35			0,132	100		STK
-	**M12X30SN**		35			0,117	100		STK
-	**M12X40SN**		35			0,124	100		STK
-	**M12X50SN**		35			0,131	100		STK
-	**M12X60SN**		35			0,139	100		STK
-	**M12X75SN**		35			0,150	100		STK
-	**M12X100SN**		35			0,168	25		STK
-	**M16X63SN**		35			0,120	100		STK
-	**M16X102SN**		35			0,170	50		STK