PNP06-PNP12A

Sliding nut for supporting profile

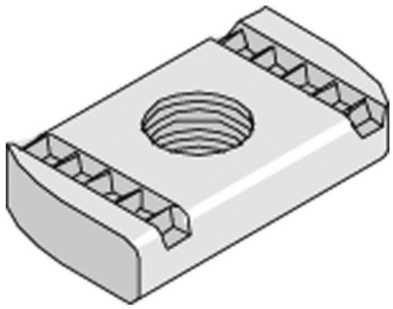

Standard finish						Pre-galvanised			
HD	Reference	↕ mm	↔ mm	→‖← mm	⇄ mm	kg/stk	⬡	Stock	Unit
-	**PNP06ZP**			M6		0,024	100	X	STK
-	**PNP08ZP**			M8		0,034	100	X	STK
-	**PNP10ZP**			M10		0,035	100	X	STK
-	**PNP12ZP**			M12		0,046	100	X	STK
-	**PNP12AZP**			M12		0,036	100	X	STK
-	**PNP06DINHG**			M6		0,031	100	X	STK
-	**PNP08DINHG**			M8		0,034	100	X	STK
-	**PNP10DINHG**			M10		0,038	100	X	STK
-	**PNP12DINHG**			M12		0,046	100	X	STK
-	**PNP12ADINHG**			M12		0,034	100	X	STK
-	**PNP10DF**			M10		0,035	100		STK
-	**PNP12DF**			M12		0,050	100		STK
-	**PNP12ADF**			M12		0,038	100		STK

Applicable for 41x21 profile
Dimensions comply with ISO965-2.