PNK

Sliding nut with PVC holder

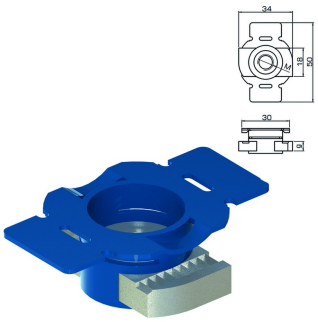

Standard finish		Electro zinc-plated							
HD	Reference	↕ mm	↔ mm	→‖← mm	⇄ mm	kg/stk	⬡	Stock	Unit
-	**PNK08**	50	34	6		0,020	25		STK
-	**PNK10**	50	34	6		0,020	50		STK
-	**PNK12**	50	34	8		0,030	25		STK